M 1: 10

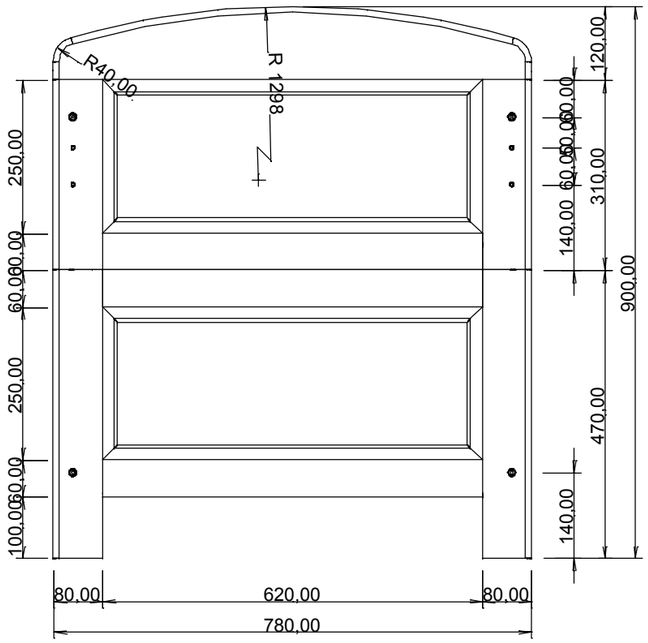

M 1: 10

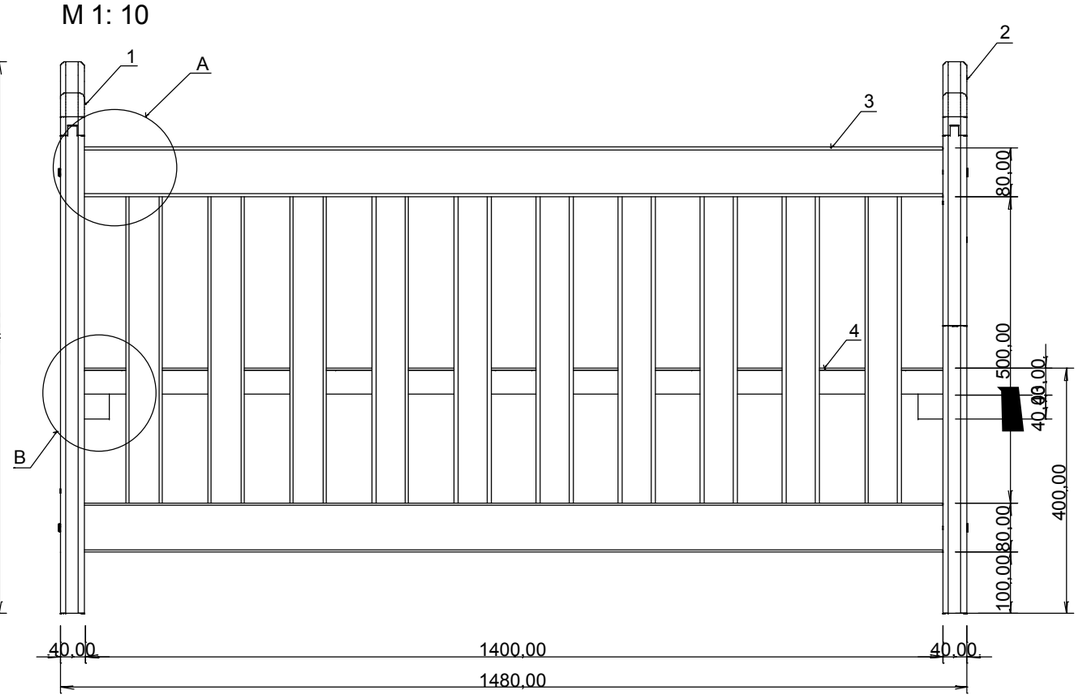

A, M 1: 5

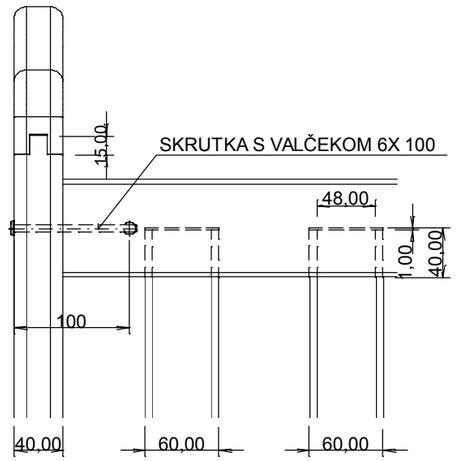

B, M 1: 5

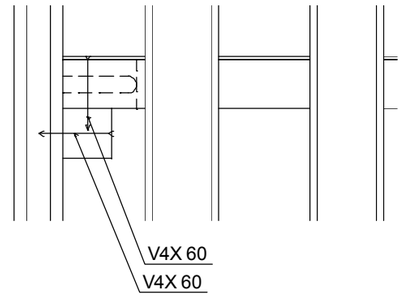

M 1: 10

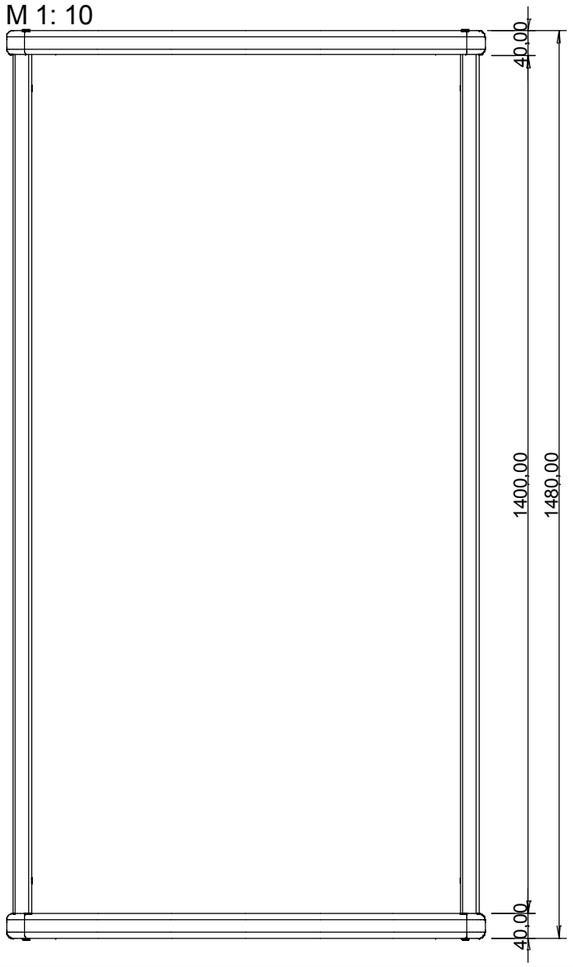

M 1: 20

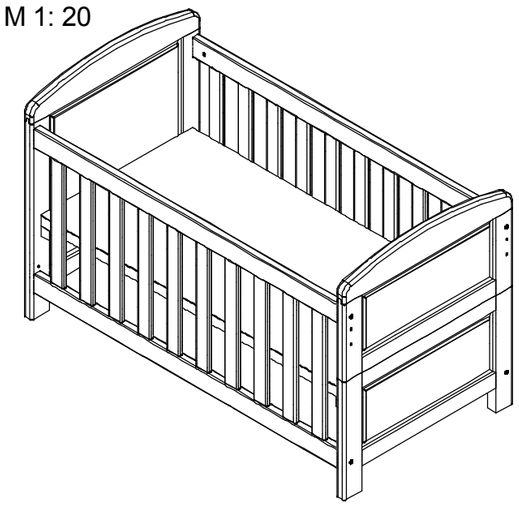

M 1: 20